Item #	Aaon Part #	File Name	Qty
1	P04400	bushing snap rl.par	1
2	p82360	screw #10-24 x .625 hex hd.par	3
3	P94930	collar door latch rl.par	1
4	P94950	handle door latch rl#4.par	1
5	P94960	handle lock block w dim rnd.par	1
6	R00260	bushing door handle rl.par	1
7	R00270	washer neoprene door handle rl.par	1
8	R21710	latch door rmc.par	1

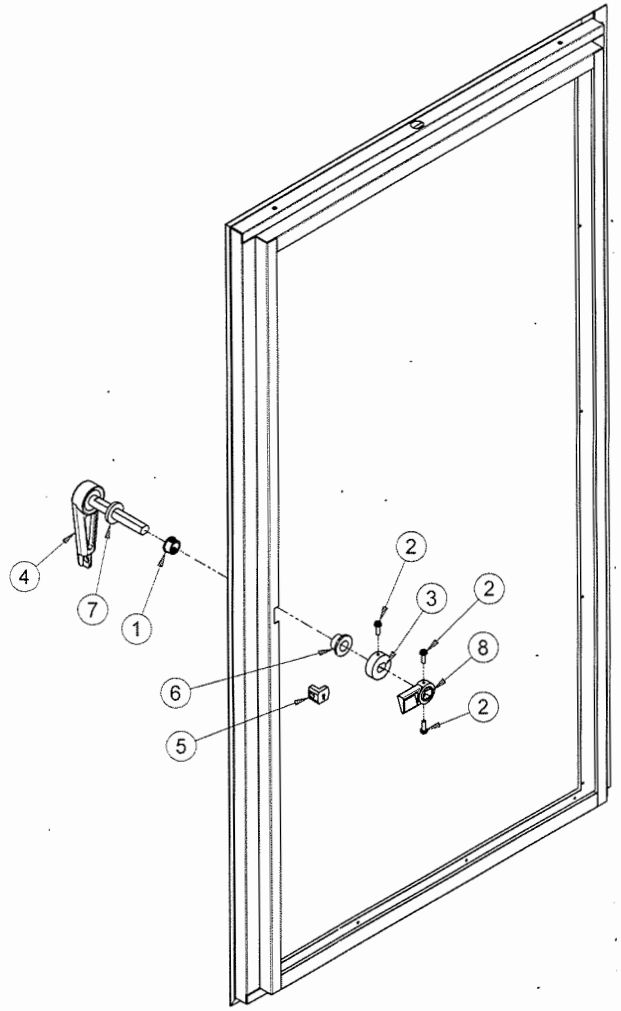

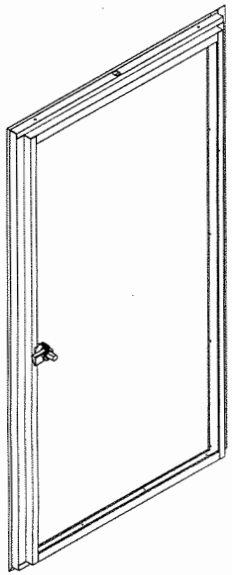

REV	BY	ECN NUMBER	DATE
B	BLH	1168AQ	06/18/13
A	BLH	1728AH	10/19/06
NEW	CF	1605AH	10/06/06

MATERIAL: N/A

TOLERANCES

FRAC.: +/- 1/32 ≤ 48 INCHES, +/- 1/16 > 48 INCHES

DEC. +/- 0.03 ≤ 48 INCHES, +/- 0.06 > 48 INCHES

ANG. +/- 1°

UNLESS OTHERWISE SPECIFIED

DWG BY: JMO

CKD BY:

APPD BY:

SQUARE FT.: N/A

AAON INC.

2425 S. YUKON TULSA, OKLAHOMA 74108

DOOR HANDLE ASSY FOAM RND

SHEET 1 / 1

DATE	DRAWING NUMBER	REV
10/06/06	D293391-001	B